LTR	DATE	BY	CHECK	REVISIONS
A	8/11/00			INITIAL DESIGN

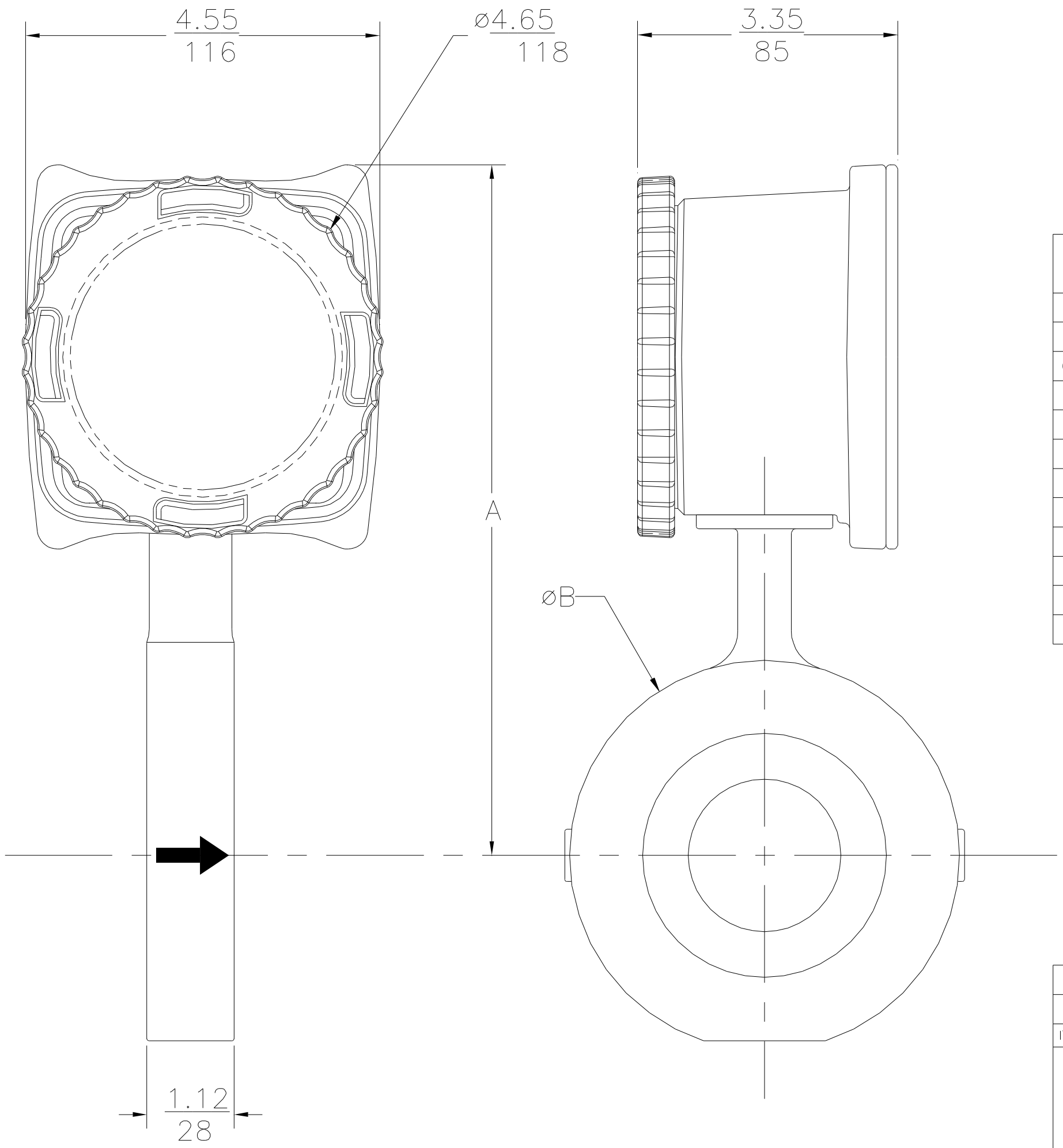

SERIES 8000

PIPE SIZE		DIMENSION			
		A		B	
in	mm	in	mm	in	mm
0.5	15	6.62	168	1.69	43
0.75	20	7.06	179	2.00	51
1.0	25	7.25	184	2.38	60
1.5	40	7.81	198	3.12	79
2.0	50	8.00	203	3.75	95
2.5	65	8.54	217	4.25	108
3.0	80	8.87	225	5.00	127
4.0	100	9.95	252	6.13	156
5.0	125	10.36	263	7.38	187
6.0	150	11.05	280	8.38	213
8.0	200	12.30	311	10.38	264

NOTES:

1. DIMENSION FORMAT IS $\frac{\text{in}}{\text{mm}}$

ITEM	DWG. NO.	DESCRIPTION OF MATERIALS	QTY.

UNLESS OTHERWISE SPECIFIED:
DIMENSIONS ARE IN INCHES
TOLERANCES
FRACTIONS: E
.X E
.XX E
.XXX E
ANGLES: E
SURFACE FINISH: S

DRAWN BY
DATE 8/11/00
CHECKED BY

RCM Industries, Inc.
110 MASON CIRCLE
CONCORD, CA. 94520

SERIES 8000 FLOWMETER
HOUSING–BODY ASSEMBLY

SCALE 1:1 | SIZE C | DWG NO. 6390 | REV A